QH(QW-G)系列潜水供水泵
QH(QW)-G series submersible water supply pumps

一、产品简介 Product Profile

QH(QW)-G系列潜水供水泵是采用国内优秀水力模型专为供水场合设计而成的，具有机组效率高、可靠性好、装卸快捷、自动控制和减少泵站土建造价等优点。

QH系列泵流量范围为1100~12000m³/h，扬程为9~60m，功率为45-710kW，QW系列泵流量范围为50~5800m³/h，扬程为5~60m，功率为11~280kW，250kW及以下电机电压采用380V、660V，250kW以上电机电压可采用3kV、6kV、10kV。

QH(QW)-G series submersible water supply pumps designed with the help of domestic cutting-edge hydraulic models and feature high efficiency, good reliability, easy installation and removal, automatic control, reduced cost for civil works of pumping stations, etc.

QH series pumps come in with a flow range of 1100~ 12000m³/h, head 9~ 60mm and power 45~710kW, and QW series pumps come in with a flow range of 50- 5800m³/h, head 5 ~ 60m and power 11 ~ 280kW. The motors of 250kW or below apply the voltage of 380V and 660V, whereas the motors of 250kW or above adopt the voltage of 3kV, 6kV and 10kV.



QH-G型潜水供水泵
QH-G series submersible water supply pump

二、型号说明 Model description

350 QH(QW) 1100 - 10 - 45 - G

- G：供水专用（可不注） Water supply for special use (Not specified)
- 45：电机功率Motor power (kW)
- 10：扬程(m)Head
- 1100：流量(m³/h) Flow rate(m³/h)
- QH(QW)：导叶（涡壳）式潜水供水泵 Guide vane(volute)submersible pump
- 350：排出口径(mm) Outlet caliber



QW-G型潜水供水泵
QW-G series of submersible water supply pump

三、主要用途及特点 Applications and features

该系列泵用于输送物理化学性质类似于水的液体，介质温度不超过40℃，适用于水利、给排水、供水以及防洪、排涝等场合。

1．适用性强：由于机电一体，潜入水下工作，对水位涨落大的水源取水尤为合适；

2．安装方便：有固定自动耦合和井筒式安装等形式，省去了传统泵安装维修过程中耗工、耗时的对中、找正安装工序；

3．控制方便：全自动控制、保护及信号输出，易集中控制；

4．可靠性高：具有漏水检测、过热、过载超温、轴温保护等功能；

5．节约资金：使用此系统，无需建庞大的地面建筑，大量节省土建投资达40~60%：由于实行自动化管理，可节约运行管理费用30~40%。

This series of pumps are used to transfer the liquid which is physically and chemically similar to water, with medium temperature not exceeding 40℃ , and intend for water conservancy, water supply and drainage, flood control, flood drainage, etc.

1. Strong applicability: Thanks to electromechanical integration, the pumps submerge to work and are particularly suitable for water intake from a water source with wide fluctuation of water level.

2. Easy installation: The pumps can be installed through fixed automatic coupling and pits, etc. thus saving the time and labor-consuming operations of centering and alignment carried out in traditional installation of pumps.

3. Easy control: The pumps are easy to control in a centralized manner due to full automatic control, protection and signal output.

4. High reliability: The pumps have multiple functions such as water leakage detection, and protection against overheating, overload, over-temperature and shaft temperature, etc.

5. Good cost efficiency: Application of this system does not require a massive surface building, thereby saving substantial investment in civil works by up to 40- 60%,and with the help of automatic management, it can reduce operating overheads by 30- 40%.

四、结构说明 Description of Structure

QH(QW)-G系列潜水供水泵机电一体化，整个水泵结构紧凑，并设置了各种状态显示及保护装置，使得泵的运行更加安全、可靠。

QH-G型潜水供水泵为导叶式结构，QW-G型潜水供水泵为蜗壳式结构，其结构分别介绍如下:

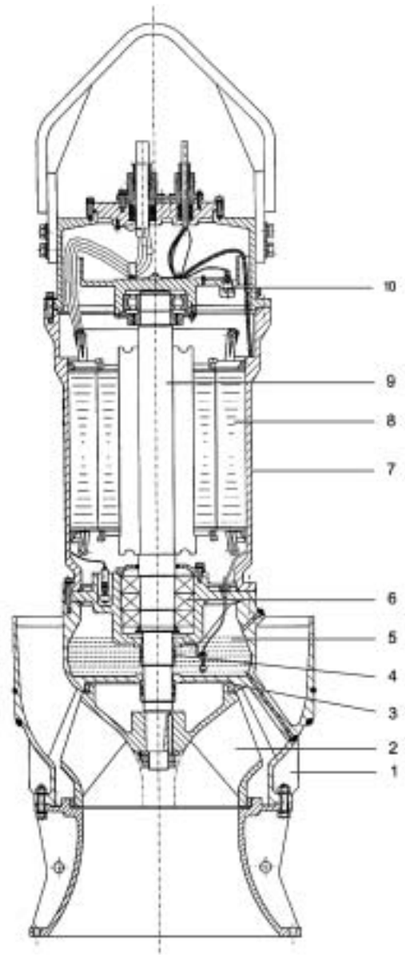

QH-G型潜水供水泵结构图
Structure figure for QH-G series submersible water supply pump

(一)QH-G型潜水供水泵(见左图)

1、防转装置

机组启动瞬间，电机启动力矩的反作用力矩常会使机组整体向相反方向旋转，防转装置能解决此问题。

2、叶轮

高效率离心式叶轮，经过动平衡试验，运行平稳。

3、水力平衡装置

可以平衡泵的轴向力，减轻轴承负担；降低机械密封处的压力，提高泵的可靠性。

4、轴密封

两套或三套独立的机械密封，使电机与泵密封隔离；上下串联安装，提供双重保险，提高了可靠性。

5、油室

油润滑并冷却密封，并在电机与所输送的介质之间起隔离作用，内留的体积可减缓油室内压力急剧升高。

6、轴承

采用滚动轴承，能承受所有的轴向和径向载荷，并完全与泵所输送的介质分开。

7、冷却

电机外壳直接将热量传到周围介质中，热量被周围的水流带走。大功率高电压电机，采用内风道散热专利技术，使得三相绕组的温升低、温度场分布均匀。

8、电机

高性能鼠笼式感应电机，特别为潜水泵设计制造，符合GB755标准。绝缘等级为F级，最高工作温度可达135℃，随功率不同，可采用380V、660V、3kV、6kV或10kV等电压，对高电压电机采用两次VPI绝缘工艺，确保绝缘可靠。

9、泵／电机轴

泵与电机同轴，结构紧凑，轴伸尽量缩短，从设计上减小挠度，运行时振动小，密封和轴承寿命更长。

10、监测装置

潜水供水泵装有多道保护装置，可把引线引至电控箱。保护装置有：过载、缺相、泄漏、超温、湿度、浸水保护等(视泵的结构不同而有所差别)。

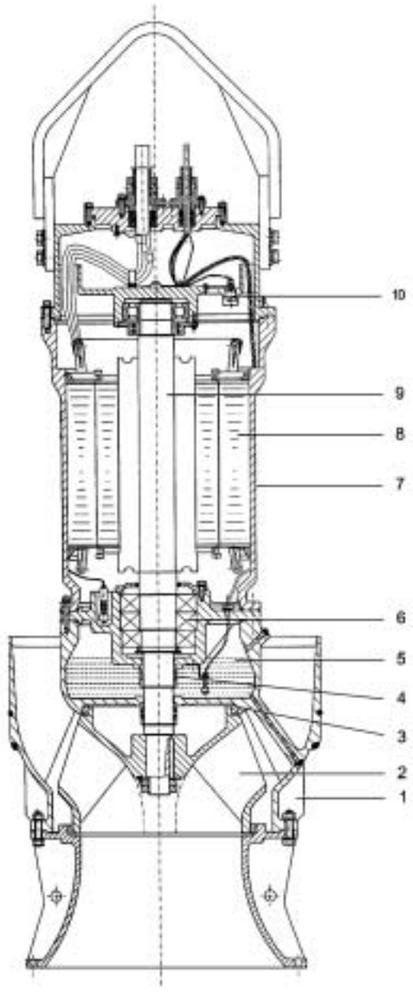

QH-G型潜水供水泵结构图
Structure figure for QH-G series submersible water supply pump

QH-G and QW-G series of submersible pumps, because of electromechanical integration, are structurally close-knit, and are configured with various status indication and protective devices,making pumps operate more safely and reliably.

QH-G submersible pumps adopt guide-vane structure, and QGW submersible pumps adopt volute structure, which are respectively described as follows:

(一) QH-G submersible pumps (See the left diagram)

1. Anti-reversion devices

At the instant when the unit starts, the reactionary torque of the motor's starting torque will make the unit as a whole revolve reversely,but that phenomenon can be solved with the anti-reversion devices.

2.Impellers

Efficient centrifugal impellers have been tested for dynamic balance and operate stably.

3.Hydraulic balance devices

The devices can reduce bear load by balancing axial force of pumps and improve the reliability of pumps by lowering the pressure at mechanical seals.

4. Shaft seal

Two or three sets of independent mechanical seals isolate the motor from the pump seal. Upper/lower tandem installation provides double insurance for pumps and improves their reliability

5. Oil containers

Oil lubricates and cools to seal, and functions to isolate the motor from the media transferred. The cubage reserved inside can abate the sharp rise in pressure within the oil container.

6.Bearings

The adoption of rolling bearings can withstand all axial and radial loads, and are completely separated from the media transferred by a pump.

7. Cooling

The motor housing transfers heat, which is carried away by the water surrounding, to surround media directly. High-power and high-voltage motors are developed by adopting the patent technology of heat dissipation through inner air duct, sending the temperature rise of 3-phase winding Iow and temperature field distributed evenly .

8.Motors

High-performance squirrel cage induction motors, consist with GB755 standard, are dedicated to submersible pumps, with insulation class being F and maximum working temperature up to 135℃

9.Pump/Motor shafts

The pump and the motor share the same shaft, thus compact in structure, short in shaft extension, small in operating vibration and long in useful life of seals and bearings.

10.Monitoring devices

Submersible pumps are configured with multi-channel monitoring and protective devices and can introduce the lead into an electrical control box. The protective devices cover the protection against overload, phase failure, leakage, over-temperature, humidity, submersion, etc.

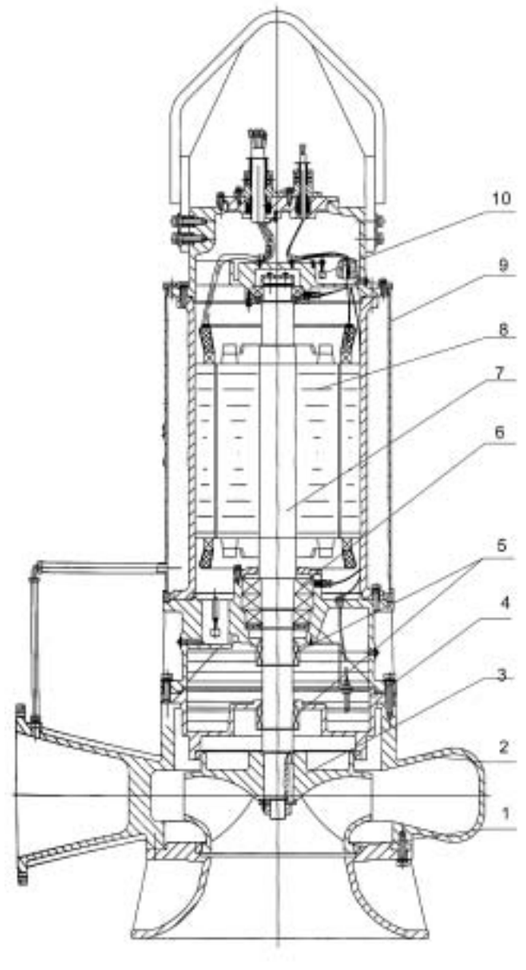

QW-G型潜水供水泵结构图
Structure figure for QW-G series submersible water supply pump

(二)QW-G型潜水供水泵（见左图）

1、耐磨环

泵壳和叶轮之间装有易于更换的耐磨环。

2、泵壳

泵壳为单蜗壳型，分布于叶轮周围收集液体。过流表面光滑，通道断面大，效率高，无堵塞。

3、叶轮

叶片式或流道式大通道叶轮，具有较强的抗缠绕和无堵塞性能，经过动平衡试验，运行平稳。

4、油室

油润滑并冷却密封，在电机与所输送的介质之间起到隔离作用。内留的体积可减缓油室内压力升高。

5、轴密封

两套独立的机械密封(视泵的结构而不同)，使电机与泵密封隔离：上下串联安装，提供双重保险，提高了可靠性。

6、轴承

采用滚动轴承，能承受所有的轴向和径向载荷，并完全与泵所输送的介质分开。

7、泵／电机轴

泵与电机同轴，结构紧凑，轴伸尽量缩短，从设计上减小挠度，运行时振动小，密封和轴承寿命更长。

8、电机

高性能鼠笼式感应电机，特别为潜水泵设计制造，符合GB755标准。绝缘等级为F级，最高工作温度可达135℃。

9、冷却水罩

电机外壳采用内循环冷却(22kW以上泵适用)。

10、监测装置

潜水排污泵装有多道监测保护装置，可把引线引至电控箱。保护装置有：过载、缺相、泄漏、超温、湿度、浸水保护等(视泵的结构不同而有所差别)。

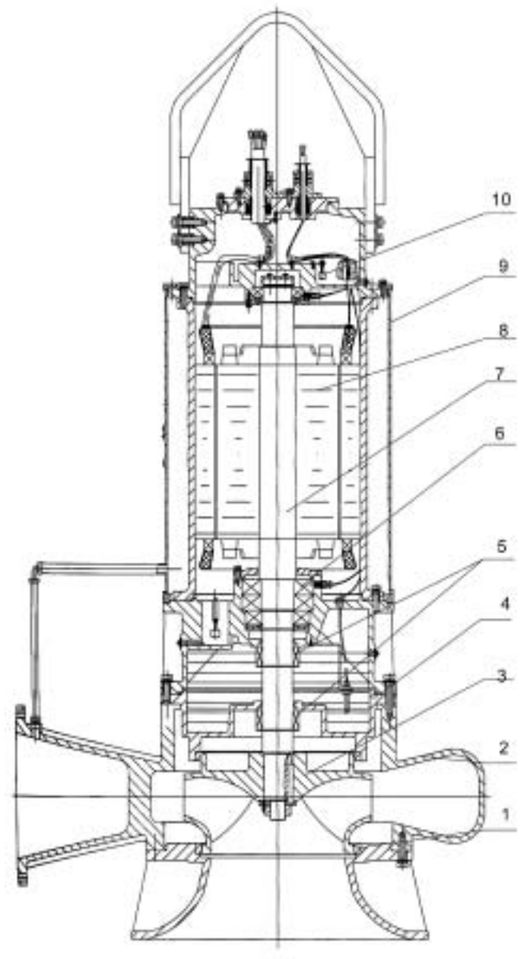

QW-G型潜水供水泵结构图
Structure figure for QW-G series submersible water supply pump

(二) QW-G submersible pumps (See the left picture)

1.Abrasion resistant rings

An easy-to-replace abrasion resistant ring is set between the casing and the impeller.

2.Casing

The casing is of single volute and distributed around the impeller to collect liquid.

3.Impellers

Big channel impellers with a vane or flow channel have strong performance of anti-entangling and non-clogging and have been tested for dynamic balance, thereby stable in operations.

4. Oil containers

Oil lubricates and cools to seal, and functions to isolate the motor from the media transferred. The cubage reserved inside can abate the sharp rise in pressure within the oil container.

5. Axial seal

Two or three sets of independent mechanical seals isolate the motor from the pump seal. Upper/lower tandem installation provides double insurance for pumps and improves their reliability.

6.Bearings

The adoption of rolling bearings can withstand all axial and radial loads, and are completely separated from the media transferred by a pump.

7. Pump/Motor shafts

The pump and the motor share the same shaft, thus compact in structure, short in shaft extension, small in operating vibration and longer in useful life of seals and bearings.

8. Motors

High-performance squirrel cage induction motors, consist with GB755 standard, are dedicated to submersible pumps, with insulation class being F and maximum working temperature up to 335℃.

9.Cooling water cover

The motor housing is cooled through internal circulation (applicable to pumps of 22kW or above).

10.Monitoring devices

Submersible pumps are configured with multi-channel protective devices and can introduce the lead into an electrical control box. The protective devices cover the protection against overload, phase failure, leakage, over-temperature, humidity, submersion, etc.

五、QH(QW)-G型潜水供水泵型谱图 Model spectrogram of QH(QW)-Gsubmersible pumps

QH-G型潜水供水泵型谱图 Model spectrogram of QH-G submersible pumps

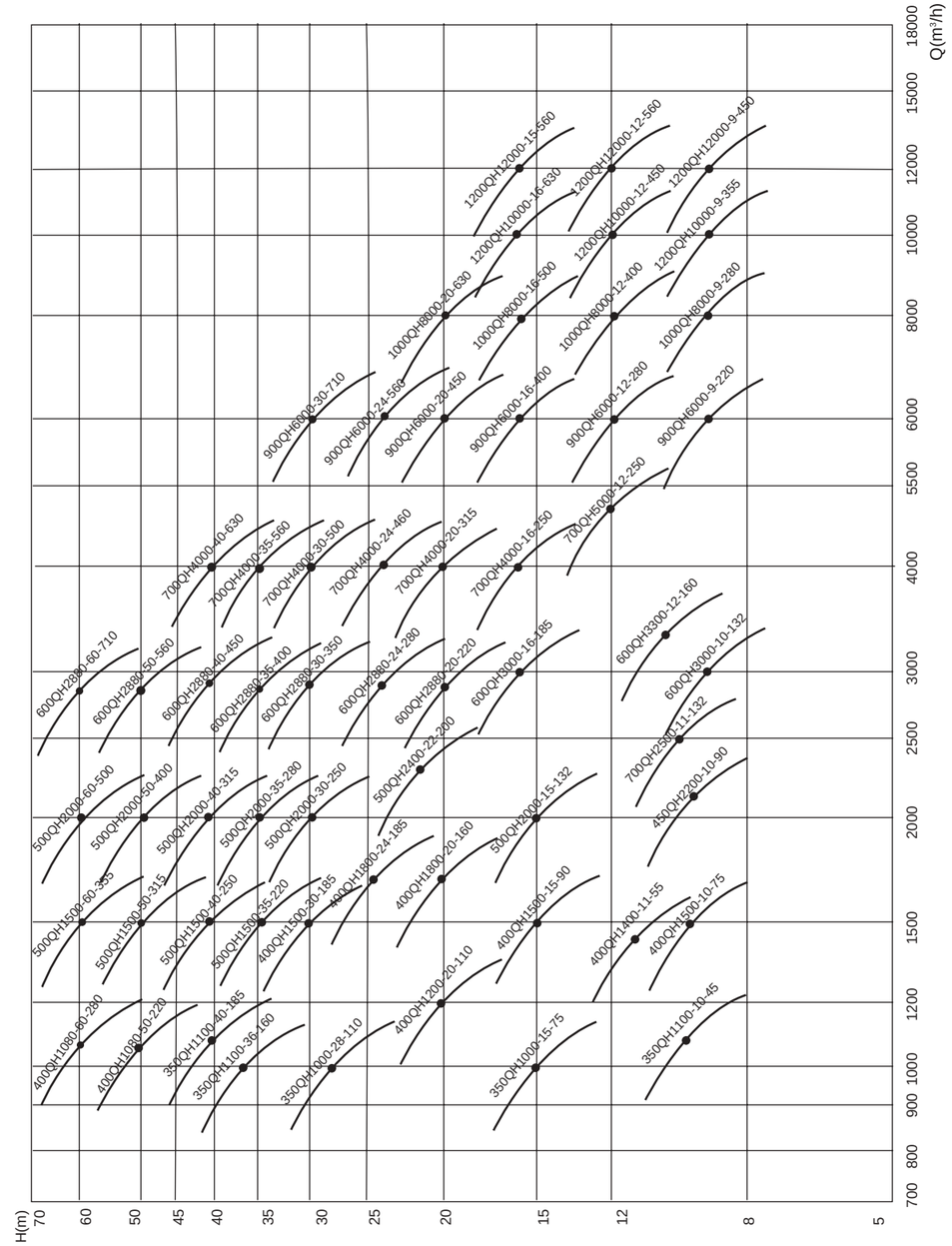

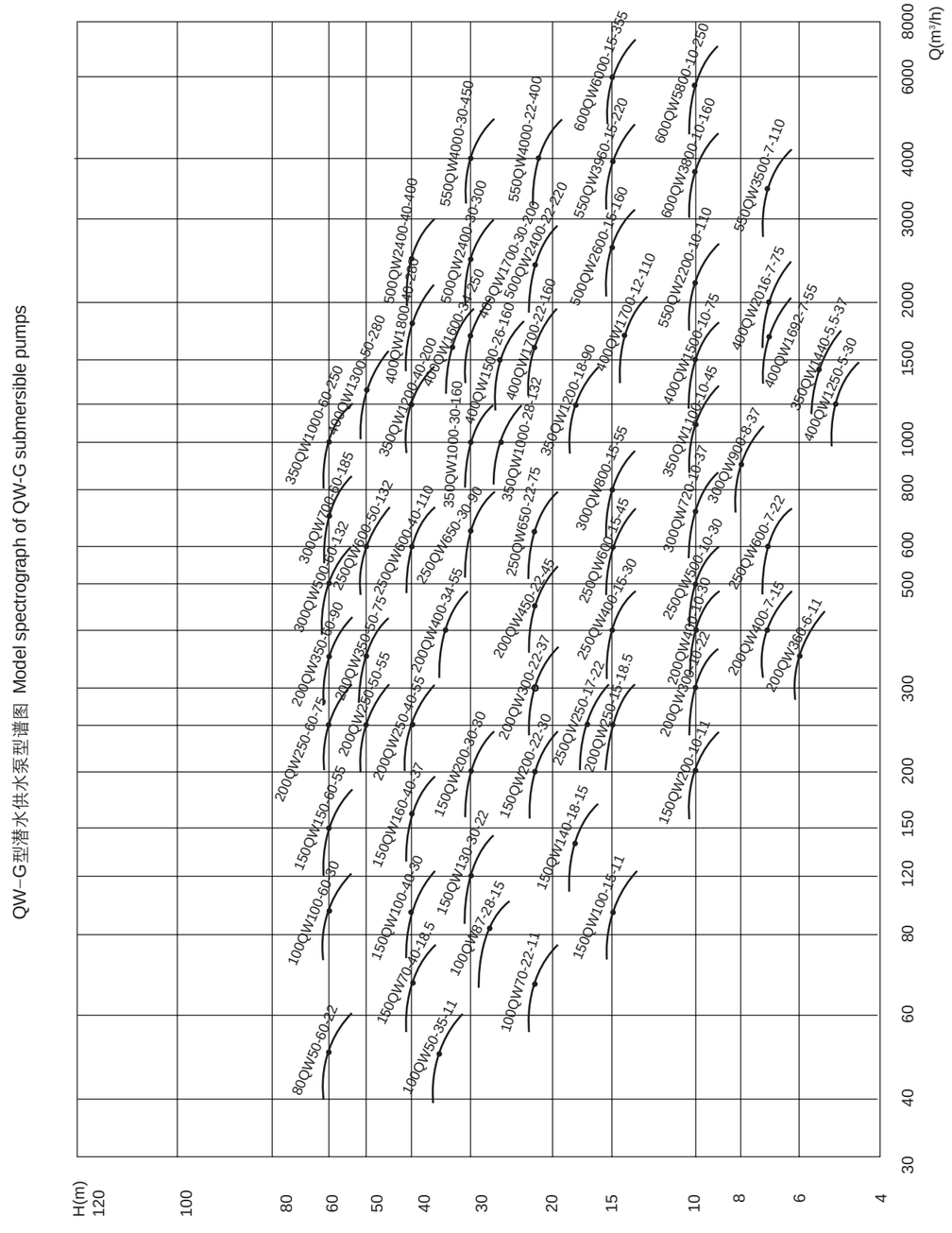

六、性能参数 Performance parameters

1、QH-G型潜水供水泵性能参数表 QH-G submersible pump performance parameter table

序号 Item	型号 Type	排出口径 Outlet diameter	流量 Flow rate (m³/h)	扬程 Head (m)	转速 Rotating speed (r/min)	功率 Power (kW)		泵效率 Pump Efficiency (%)	重量 (kg) Weight
						轴功率 Shaft Power	电机功率 Motor Power		
1	350QH1100-10-45	350	1100	10	980	37.2	45	80.6	1200
2	400QH1400-11-55	400	1400	11	980	51.8	55	81.0	1350
3	350QH1000-15-75	350	1000	15	980	54.1	75	75.5	1750
4	400QH1500-10-75	400	1500	10	980	54.1	75	75.5	1750
5	400QH1500-15-90	400	1500	15	980	77.4	90	79.1	2000
6	450QH2200-10-90	450	2200	10	980	73.4	90	81.6	2000
7	350QH1000-28-110	350	1000	28	740	94.5	110	80.7	2200
8	400QH1200-20-110	400	1200	20	980	80.8	110	80.8	2200
9	500QH2000-15-132	500	2000	15	740	99.5	132	82.1	2520
10	700QH2500-11-132	700	2500	11	740	90.0	132	83.2	2520
11	600QH3000-10-132	600	3000	10	740	97.1	132	84.1	2520
12	350QH1000-36-160	350	1000	36	980	122.3	160	80.1	2880
13	400QH1800-20-160	400	1800	20	980	118.4	160	82.8	2880
14	600QH3300-12-160	600	3300	12	740	128.0	160	84.2	2880
15	350QH1100-40-185	350	1100	40	980	150.7	185	79.5	3420
16	400QH1500-30-185	400	1500	30	980	155.9	185	78.6	3420
17	600QH3000-16-185	600	3000	16	740	156.0	185	83.8	3420
18	500QH2400-22-200	500	2400	22	980	173.6	200	82.8	3870
19	700QH5000-12-250	700	5000	12	740	190.6	250	85.7	4690
20	400QH1800-24-185	400	1800	24	980	143.3	185	82.1	3250
21	700QH4000-20-315	700	4000	20	740	260.5	315	83.6	5700
22	400QH1080-50-220	400	1080	50	1450	187.3	220	78.5	3160
23	400QH1080-60-280			60		227.3	280	77.6	3560
24	500QH1500-35-220	500	1500	35	980	184.2	220	77.6	5020
25	500QH1500-40-250			40		211.8	250	77.1	5230
26	500QH1500-50-315			50		266.9	315	76.5	5890
27	500QH1500-60-355			60		323.2	355	75.8	6100

序号 Item	型号 Type	排出口径 Outlet diameter	流量 Flow rate (m^3/h)	扬程 Head (m)	转速 Rotating speed (r/min)	功率 Power (kW)		泵效率 Pump Efficiency (%)	重量 (kg) Weight
						轴功率 Shaft Power	电机功率 Motor Power		
28	500QH2000-30-250	500	2000	30	980	197.3	250	82.8	5230
29	500QH2000-35-280			35		231.3	280	82.4	5300
30	500QH2000-40-315			40		266.2	315	81.8	5890
31	500QH2000-50-400			50		335.7	400	81.1	6620
32	500QH2000-60-500			60		412.4	500	79.2	6790
33	600QH2880-20-220	600	2880	20	980	185.6	220	84.5	5150
34	600QH2880-24-280			24		224	280	84.0	5300
35	600QH2880-30-355			30		281.3	355	83.6	5530
36	600QH2880-35-400			35		331.0	400	82.9	6620
37	600QH2880-40-450			40		380.1	450	82.5	6710
38	600QH2880-50-560			50		479.2	560	81.8	7380
39	600QH2880-60-710			60		581.5	710	80.9	8910
40	700QH4000-16-250	700	4000	16	740	203.3	250	85.7	8200
41	700QH4000-20-315			20		255.6	315	85.2	8500
42	700QH4000-24-400			24		308.2	400	84.8	10540
43	700QH4000-30-500	700	4000	30	740	387.5	500	84.3	11310
44	700QH4000-35-560			35		454.8	560	83.8	11450
45	700QH4000-40-630			40		522.8	630	83.3	11740
46	900QH6000-9-220	900	6000	9	590	171.7	220	85.6	7060
47	900QH6000-12-280			12		230.0	280	85.2	7270
48	900QH6000-16-400			16		308.2	400	84.8	7990
49	900QH6000-20-450			20		388.4	450	84.1	8520
50	900QH6000-24-560			24		467.8	560	83.8	8880
51	900QH6000-30-710			30		586.8	710	83.5	10150
52	1000QH8000-9-280	1000	8000	9	590	227.6	280	86.1	7270
53	1000QH8000-12-400			12		304.9	400	85.7	8000
54	1000QH8000-16-500			16		408.5	500	85.3	8600
55	1000QH8000-20-630			20		513.0	630	84.9	9860
56	1200QH10000-9-355	1200	10000	9	490	279.7	355	87.0	9060
57	1200QH10000-12-450			12		377.2	450	86.6	11000
58	1200QH10000-16-630			16		505.3	630	86.2	12800
59	1200QH12000-9-450	1200	12000	9	490	335.6	450	87.6	11000
60	1200QH12000-12-560			12		450.6	560	87	12500
61	1200QH12000-16-710			16		604.9	710	86.4	17000

2、QW-G型潜水供水泵性能参数表 QW-G submersible pump performance parameter table

序号 Item	型号 Type	排出口径 Outlet diameter	流量 Flow rate (m^3/h)	扬程 Head (m)	转速 Rotating speed (r/min)	功率 Power (kW)	效率 Efficiency (%)	重量 (kg) Weight
1	80QW50-60-22	80	50	60	2900	22	51.0	302
2	100QW70-22-11	100	70	22	1450	11	69.4	278
3	100QW50-35-11	100	50	35	1450	11	67.2	279
4	100QW87-28-15	100	87	28	1450	15	70.2	360
5	100QW100-60-30	100	100	60	2900	30	73.2	430
6	150QW100-15-11	150	100	15	1450	11	71.8	280
7	150QW200-10-11	150	200	10	1450	11	76.2	282
8	150QW140-18-15	150	140	18	1450	15	74.3	360
9	150QW70-40-18.5	150	70	40	1450	18.5	70.8	480
10	150QW130-30-22	150	130	30	1450	22	74.2	520
11	150QW100-40-30	150	100	40	1450	30	77.2	880
12	150QW200-22-30	150	200	22	980	30	78.1	900
13	150QW200-30-30	150	200	30	980	30	77.5	900
14	150QW160-40-37	150	160	40	980	37	75.4	1150
15	150QW150-60-55	150	150	60	980	55	74.8	1260
16	200QW360-6-11	200	360	6	1450	11	77.2	290
17	200QW400-7-15	200	400	7	1450	15	78.2	380
18	200QW250-15-18.5	200	250	15	1450	18.5	77.3	490
19	200QW300-10-22	200	300	10	980	22	78.6	535
20	200QW400-10-22	200	400	10	980	22	77.8	560
21	200QW300-22-37	200	300	22	980	37	78.3	1100
22	200QW450-22-45	200	450	22	980	45	80.5	1400
23	200QW250-40-55	200	250	40	1450	55	74.4	1380
24	200QW250-50-55	200	250	50	1450	55	74.2	1420
25	200QW400-34-55	200	400	34	980	55	75.1	1480
26	200QW250-60-75	200	250	60	1450	75	77.2	1480
27	200QW350-50-75	200	350	50	980	75	78.3	1600
28	200QW350-60-90	200	350	60	1450	90	79.3	1550
29	250QW600-7-22	250	600	7	980	22	80.1	820
30	250QW250-17-22	250	250	17	980	22	71.0	820
31	250QW500-10-30	250	500	10	980	30	78.2	900
32	250QW400-15-30	250	400	15	980	30	77.8	900
33	250QW600-15-45	250	600	15	980	45	79.6	1456
34	250QW650-22-75	250	650	22	980	75	80.4	1516

序号 Item	型号 Type	排出口径 Outlet diameter	流量 Flow rate (m^3/h)	扬程 Head (m)	转速 Rotating speed (r/min)	功率 Power (kW)	效率 Efficiency (%)	重量 (kg) Weight
35	250QW650-30-90	250	650	30	980	90	79.5	1800
36	250QW600-40-110	250	600	40	740	110	81.0	2000
37	250QW600-50-132	250	600	50	740	132	79.3	2450
38	300QW720-10-37	300	720	10	980	37	79.6	1180
39	300QW900-8-37	300	900	8	980	37	80.3	1150
40	300QW800-15-55	300	800	15	980	55	81.3	1350
41	300QW500-60-132	300	500	60	1450	132	75.2	1980
42	300QW700-60-185	300	700	60	1450	185	78.3	2970
43	350QW1440-5.5-37	350	1440	5.5	980	37	77.5	1250
44	350QW1100-10-45	350	1100	10	980	45	81.1	1500
45	350QW1200-18-90	350	1200	18	980	90	82.0	2000
46	350QW1000-28-132	350	1000	28	740	132	80.7	2830
47	350QW1000-30-160	350	1000	30	740	160	80.8	3150
48	350QW1200-40-200	350	1200	40	740	200	80.9	3920
49	350QW1000-60-250	350	1000	60	980	250	80.0	4610
50	400QW1250-5-30	400	1250	5	980	30	71.8	960
51	400QW1692-7-55	400	1692	7	740	55	77.9	1350
52	400QW2016-7-75	400	2016	7	740	75	85.8	1700
53	400QW1500-10-75	400	1500	10	980	75	82.5	1670
54	400QW1700-12-132	400	1700	12	740	132	82.4	2670
55	400QW1700-22-160	400	1700	22	740	160	80.3	3200
56	400QW1500-26-160	400	1500	26	740	160	80.5	3210
57	400QW1700-30-200	400	1700	30	740	200	82.5	3850
58	400QW1600-34-250	400	1600	34	740	250	83.3	4280
59	400QW1800-40-280	400	1800	40	980	280	83.5	4730
60	400QW1300-50-280	400	1300	50	980	280	79.3	4780
61	500QW2200-10-110	500	2200	10	980	110	82.5	2160
62	500QW2600-15-160	500	2600	15	740	160	82.8	3214
63	500QW2400-22-220	500	2400	22	740	220	83.3	4280
64	500QW2400-30-300	500	2400	30	740	300	84.2	5120
65	500QW2400-40-400	500	2400	40	740	400	83.9	5950
66	550QW3500-7-110	550	3500	7	740	110	82.8	2300
67	550QW3960-15-220	550	3960	15	740	220	83.5	4400
68	550QW4000-22-400	550	4000	22	740	400	85.1	6010
69	550QW4000-30-450	550	4000	30	740	450	85.1	6280
70	600QW3800-10-160	600	3800	10	740	160	84.1	3000
71	600QW5800-10-250	600	5800	10	740	250	85.0	4050
72	600QW6000-15-355	600	6000	15	740	355	82.3	5530

七、QH(QW)-G系列潜水供水泵安装形式及尺寸

QH(QW)-G Submersib Pump Installation and Size

1、QH-G系列潜水供水泵的安装及尺寸

QH-G系列潜水供水泵采用开敞式进水，安装形式为钢制井筒式安装、悬吊井筒式安装及混凝土预制井筒式安装。钢制井筒式安装及悬吊井筒式安装由本公司提供整套井筒，混凝土预制井筒式安装由本公司提供井盖装置及安装底座。

安装时，将潜水电泵吊入井筒中着底为止，导叶体上的斜面与井筒中锥管(安装底座)的斜面结合，导叶体上的O形圈起密封作用。

(1)钢制井筒式安装及尺寸

1. submersible pump installation and size

QH-G submersible pumps adopt opening water inlet and are installed through steel pits, overhung pits and concrete pits. For installation through steel pits and overhung pits, the company will provide a complete set of pits, and for installation through concrete pits, the company will provide pit cover devices and base frames. When installing the submersible pumps, hang them into the pit until bottom. The cant of the guide vane combines that of the conical tube (base frame) inside the pit. The O-shaped ring on the guide vane functions as seal.

(1) Installation through steel pits and size

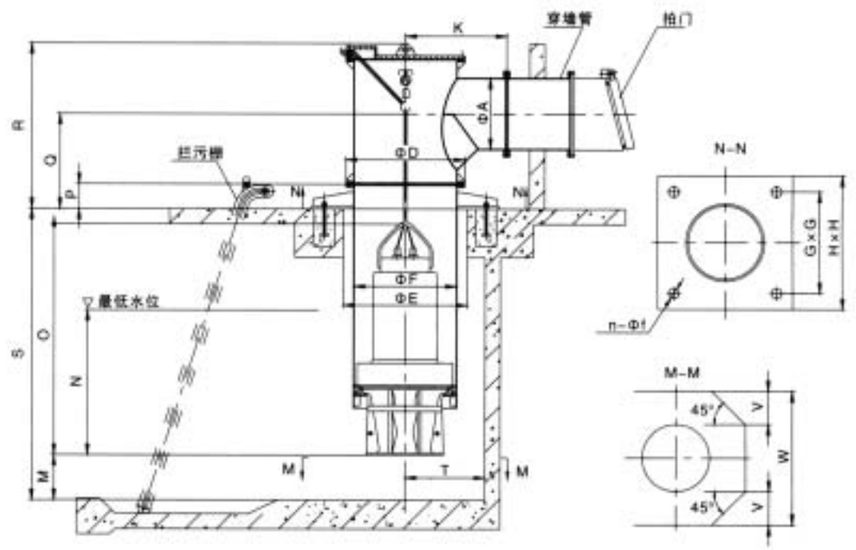

钢制井筒式安装图

Sketch for installation throught steel pits

注:

①表中尺寸为泵的安装尺寸及泵站设计的水力控制尺寸，其中泵站设计的水力尺寸为参考值。

②尺寸A依据泵流量确定，以控制流速，减少水力损失，表中尺寸为参考值，如需要，可适量加大；尺寸S、Q依据泵站具体条件确定;

③泵中心距后池壁不大于尺寸T;

④同池内两泵中心距不小于尺寸Z。

Note:

①The sizes as shown in the table are installation sizes and hydraulic control sizes designed for a pump station, of which the latter are values used for reference.

②Size A is determined based on pump flow to control flow rate and reduce hydraulic loss. The sizes given in the table are for reference and can be increased as appropriate. Sizes S and Q are determined based on pump station-specific conditions.

③The distance from pump center to rear sump wall should not be greater than size T;

④The distance between two pump centers in the same sump should not be less than size Z.

QH–G系列潜水供水泵钢制井筒式安装尺寸表

Size table for installation through steel pits of QH-G series of submersible water supply pumps

序号 Item	型号Type	øA	ØD	ØE	ØF	G	H	n-øf	K	M	N	O	P	Z	T	W	V
1	350QH1100-10-45	350	755	800	600	1150	1350	4-M24X400	750	400	1400	1850	200	1400	450	850	210
2	400QH1400-11-55	400	755	800	600	1150	1350	4-M24X400	750	400	1400	1850	200	1400	450	850	210
3	350QH1000-15-75	350	975	1050	800	1350	1600	4-M24X400	900	400	1400	2000	200	1650	575	1100	210
4	400QH1500-10-75	400	975	1050	800	1350	1600	4-M24X400	900	450	1600	2000	200	1650	575	1100	250
5	400QH1500-15-90	400	975	1050	800	1350	1600	4-M24X400	900	450	1600	2000	200	1650	575	1100	250
6	450QH2200-10-90	450	975	1050	800	1350	1600	4-M24X400	900	500	1700	2000	200	1650	575	1200	300
7	350QH1000-28-110	350	1175	1365	1000	1700	2000	4-M36X500	1000	400	1400	2200	220	2050	725	1450	210
8	400QH1200-20-110	400	975	1050	800	1350	1600	4-M30X400	900	450	1500	2200	200	1650	575	1100	230
9	500QH2000-15-132	500	1175	1365	1000	1700	2000	4-M36X500	1000	500	1700	2200	220	2050	725	1450	285
10	700QH2500-11-132	700	1175	1365	1000	1700	2000	4-M36X500	1000	500	1700	2200	220	2050	725	1450	320
11	600QH3000-10-132	600	1175	1365	1000	1700	2000	4-M36X500	1000	600	1900	2200	220	2050	725	1450	350
12	350QH1000-36-160	350	1175	1365	1000	1700	2000	4-M36X500	1000	400	1400	2400	220	2050	725	1450	210
13	400QH1800-20-160	400	1175	1365	1000	1700	2000	4-M36X500	1000	500	1700	2400	220	2050	725	1450	275
14	600QH3300-12-160	600	1175	136	1000	1700	2000	4-M36X500	1000	600	1900	2400	220	2050	725	1450	370
15	350QH1100-40-185	350	1175	1365	1000	1700	2000	4-M36X500	1000	400	1700	2400	220	2050	725	1450	210
16	400QH1500-30-185	400	1175	1365	1000	1700	2000	4-M36X500	1000	450	1600	2400	220	2050	725	1450	250
17	600QH3000-16-185	600	1175	1365	1000	1700	2000	4-M36X500	1000	600	1900	2400	220	2050	725	1450	350
18	500QH2400-22-200	500	1175	1365	1000	1700	2000	4-M36X500	1000	500	1700	2400	220	2050	725	1450	320
19	700QH5000-12-250	700	1305	1365	1100	1700	2000	4-M36X500	1000	700	2100	2600	220	2050	775	1820	455
20	400QH1800-24-185	400	1175	1365	1000	1700	2000	4-M36X500	1000	500	1700	2800	220	2050	725	1450	275
21	700QH4000-20-315	700	1305	1365	1100	1700	2000	4-M36X500	1000	700	2000	3200	220	2050	775	1450	405
22	400QH1080-50-220	400	1305	1365	1100	1400	1600	4-M36X500	1200	400	1400	2400	300	1650	775	1450	210
23	400QH1080-60-280	400	1305	1365	1100	1400	1600	4-M36X500	1200	400	1400	2400	300	1650	775	1450	210
24	500QH1500-35-220	500	1405	1460	1200	1500	1700	4-M36X500	1200	500	1600	2700	300	1750	825	1550	250
25	500QH1500-40-250	500	1405	1460	1200	1500	1700	4-M36X500	1200	500	1600	2700	300	1750	825	1550	250
26	500QH1500-50-315	500	1405	1460	1200	1500	1700	4-M36X500	1200	500	1700	2700	300	1750	825	1550	250
27	500QH1500-60-355	500	1405	1460	1200	1500	1700	4-M36X500	1200	500	1700	2700	300	1750	825	1550	250
28	500QH2000-30-250	500	1405	1460	1200	1500	1700	4-M36X500	1200	500	1800	2700	300	1750	825	1550	285

QH–G系列潜水供水泵钢制井筒式安装尺寸表

Size table for installation through steel pits of QH-G series of submersible water supply pumps

序号 Item	型号Type	øA	ØD	ØE	ØF	G	H	n-øf	K	M	N	O	P	Z	T	W	V
29	500QH2000-35-280	500	1405	1460	1200	1500	1700	4-M36x500	1200	500	1800	2700	300	1750	825	1550	285
30	500QH2000-40-315	500	1405	1460	1200	1500	1700	4-M36x500	1200	500	1800	2700	300	1750	825	1550	285
31	500QH2000-50-400	500	1405	1460	1200	1500	1700	4-M36x500	1200	500	1800	2700	300	1750	825	1550	285
32	500QH2000-60-500	500	1405	1460	1200	1500	1700	4-M36x500	1200	500	1800	2700	300	1750	825	1550	285
33	600QH2880-20-220	600	1405	1460	1200	1500	1700	4-M36x500	1200	600	1900	2700	300	1750	825	1550	340
34	600QH2880-24-280	600	1405	1460	1200	1500	1700	4-M36x500	1200	600	1900	2700	300	1750	825	1550	340
35	600QH2880-30-355	600	1405	1460	1200	1500	1700	4-M36x500	1200	600	1900	2700	300	1750	825	1550	340
36	600QH2880-35-400	600	1405	1460	1200	1500	1700	4-M36x500	1200	600	1900	2700	300	1750	825	1550	340
37	600QH2880-40-450	600	1520	1600	1300	1650	1850	4-M36x500	1200	600	1900	2700	300	1900	875	1700	340
38	600QH2880-50-560	600	1520	1600	1300	1650	1850	4-M36x500	1200	600	1900	2700	300	1900	875	1700	340
39	600QH2880-60-710	600	1520	1600	1300	1650	1850	4-M36x500	1200	600	1900	2700	300	1900	875	1700	340
40	700QH4000-16-250	700	1520	1600	1300	1650	1850	4-M36x500	1200	700	2000	2800	300	1900	875	1700	405
41	700QH4000-20-315	700	1520	1600	1300	1650	1850	4-M36x500	1200	700	2000	2800	300	1900	875	1700	405
42	700QH4000-24-400	700	1520	1600	1300	1650	1850	4-M36x500	1200	700	2000	2800	300	1900	875	1700	405
43	700QH4000-30-500	700	1520	1600	1300	1650	1850	4-M36x500	1200	700	2000	2800	300	1900	875	1700	405
44	700QH4000-35-560	700	1520	1600	1300	1650	1850	4-M36x500	1200	700	2000	2800	300	1900	875	1700	405
45	700QH4000-40-630	700	1520	1600	1300	1650	1850	4-M36x500	1200	700	2000	2800	300	1900	875	1700	405
46	900QH6000-9-220	900	1520	1600	1300	1650	1850	4-M36x500	1200	850	2400	3000	300	2000	875	1700	500
47	900QH6000-12-280	900	1520	1600	1300	1650	1850	4-M36x500	1200	850	2400	3000	300	2000	875	1700	500
48	900QH6000-16-400	900	1520	1600	1300	1650	1850	4-M36x500	1200	850	2400	3000	300	2000	875	1700	500
49	900QH6000-20-450	900	1520	1600	1300	1650	1850	4-M36x500	1200	850	2400	3000	300	2000	875	1700	500
50	900QH6000-24-560	900	1830	1900	1600	1900	2200	6-M36x500	1500	850	2400	3000	400	2250	1000	2000	500
51	900QH6000-30-710	900	1830	1900	1600	1900	2200	6-M36x500	1500	850	2400	3100	400	2250	1000	2000	500
52	1000QH8000-9-280	1000	1830	1900	1600	1900	2200	6-M36x500	1500	1000	2600	3500	400	2300	1000	2300	575
53	1000QH8000-12-400	1000	1830	1900	1600	1900	2200	6-M36x500	1500	1000	2600	3500	400	2300	1000	2300	575
54	1000QH8000-16-500	1000	1830	1900	1600	1900	2200	6-M36x500	1500	1000	2600	3500	400	2300	1000	2300	575
55	1000QH8000-20-630	1000	1830	1900	1600	1900	2200	6-M36x500	1500	1000	2600	3500	400	2300	1000	2300	575
56	1200QH10000-9-355	1200	1830	1900	1600	1900	2200	6-M36x500	1500	1200	2800	3500	400	2580	1100	2575	645
57	1200QH10000-12-450	1200	1830	1900	1600	1900	2200	6-M36x500	1500	1200	2800	3500	400	2580	1100	2575	645
58	1200QH10000-16-630	1200	2045	2100	1800	2100	2400	6-M36x500	1500	1200	2800	3500	400	2580	1100	2575	645
59	1200QH12000-9-450	1200	1830	1900	1600	1900	2200	6-M36x500	1500	1200	3000	3500	400	2825	1150	2825	705
60	1200QH12000-12-560	1200	2045	2100	1800	2100	2400	6-M36x500	1500	1200	3000	3810	400	2825	1150	2825	705
61	1200QH12000-16-710	1200	2045	2100	1800	2100	2400	6-M36x500	1500	1200	3000	3500	400	2825	1150	2825	705

(2)悬吊井筒式安装及尺寸 Installation throught overhung-pitand size

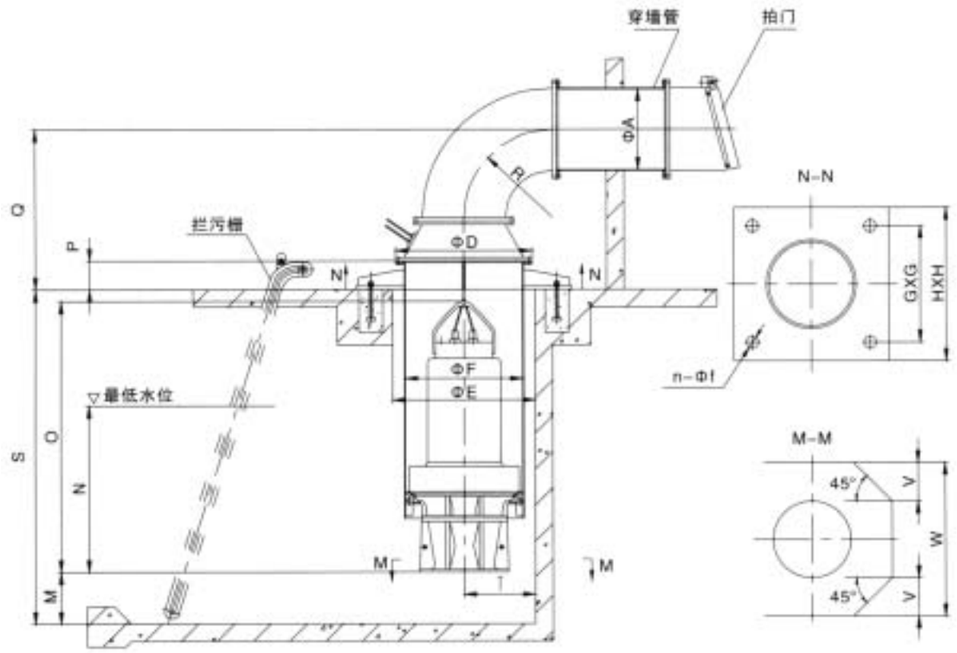

悬吊井筒式安装图
Sketch for installation throught overhung-pits

注:

①表中尺寸为泵的安装尺寸及泵站设计的水力控制尺寸，其中泵站设计的水力尺寸为参考值。

②尺寸A依据泵流量确定，以控制流速，减少水力损失，表中尺寸为参考值，如需要，可适量加大；尺寸S、Q依据泵站具体条件确定；尺寸R为最小参考尺寸，如条件许可，可适当加大；

③泵中心距后池壁不大于尺寸T;

④同池内两泵中心距不小于尺寸Z

Note

①The sizes as shown in the table are installation sizes and hydraulic control sizes designed for a pump station, of which the latter are values used for reference.

②Size A is determined based on pump flow to control flow rate and reduce hydraulic loss. The sizes given in the table are for reference and can be increased as appropriate. Sizes S and Q are determined based on pump station-specific conditions.

③The distance from pump center to rear sump wall should not be greater than size T;

④The distance between two pump centers in the same sump should not be less than size Z.

QH-G系列潜水供水泵悬吊井筒式安装尺寸表

Size table for installation through overhung-pit of QH-G series of submersible water supply pumps

序号 Item	型号 Type	øA	ØD	ØE	ØF	G	H	n-øf	R	M	N	O	P	Z	T	W	V
1	350QH1100-10-45	350	755	800	600	1150	1350	4-M24X400	600	400	1400	1850	200	1400	450	850	210
2	400QH1400-11-55	400	755	800	600	1150	1350	4-M24X400	800	400	1400	1850	200	1400	450	850	210
3	350QH1000-15-75	350	975	1050	800	1350	1600	4-M24X400	600	400	1400	2000	200	1650	575	1100	210
4	400QH1500-10-75	400	975	1050	800	1350	1600	4-M24X400	800	450	1600	2000	200	1650	575	1100	250
5	400QH1500-15-90	400	975	1050	800	1350	1600	4-M24X400	800	450	1600	2000	200	1650	575	1100	250
6	450QH2200-10-90	450	975	1050	800	1350	1600	4-M24X400	900	500	1700	2000	200	1650	575	1200	300
7	350QH1000-28-110	350	1175	1365	1000	1700	2000	4-M36X500	600	400	1400	2200	220	2050	725	1450	210
8	400QH1200-20-110	400	975	1050	800	1350	1600	4-M30X400	800	450	1500	2200	200	1650	575	1100	230
9	500QH2000-15-132	500	1175	1365	1000	1700	2000	4-M36X500	900	500	1700	2200	220	2050	725	1450	285
10	700QH2500-11-132	700	1175	1365	1000	1700	2000	4-M36X500	1250	500	1700	2200	220	2050	725	1450	320
11	600QH3000-10-132	600	1175	1365	1000	1700	2000	4-M36X500	1000	600	1900	2200	220	2050	725	1450	350
12	350QH1000-36-160	350	1175	1365	1000	1700	2000	4-M36X500	600	400	1400	2400	220	2050	725	1450	210
13	400QH1800-20-160	400	1175	1365	1000	1700	2000	4-M36X500	800	500	1700	2400	220	2050	725	1450	275
14	600QH3300-12-160	600	1175	1365	1000	1700	2000	4-M36X500	1000	600	1900	2400	220	2050	725	1450	370
15	350QH1100-40-185	350	1175	1365	1000	1700	2000	4-M36X500	600	400	1700	2400	220	2050	725	1450	210
16	400QH1500-30-185	400	1175	1365	1000	1700	2000	4-M36X500	800	450	1600	2400	220	2050	725	1450	250
17	600QH3000-16-185	600	1175	1365	1000	1700	2000	4-M36X500	1000	600	1900	2400	220	2050	725	1450	350
18	500QH2400-22-200	500	1175	1365	1000	1700	2000	4-M36X500	900	500	1700	2400	220	2050	725	1450	320
19	700QH5000-12-250	700	1305	1365	1100	1700	2000	4-M36X500	1250	700	2100	2600	220	2050	775	1820	455
20	400QH1800-24-185	400	1175	1365	1000	1700	2000	4-M36X500	800	500	1700	2800	220	2050	725	1450	275
21	700QH4000-20-315	700	1305	1365	1100	1700	2000	4-M36X500	1250	700	2000	3200	220	2050	775	1450	405
22	400QH1080-50-220	400	1305	1365	1100	1400	1600	4-M36X500	800	400	1400	2400	300	1650	775	1450	210
23	400QH1080-60-280	400	1305	1365	1100	1400	1600	4-M36X500	1250	400	1400	2400	300	1650	775	1450	210
24	500QH1500-35-220	500	1405	1460	1200	1500	1700	4-M36X500	900	500	1600	2700	300	1750	825	1550	250
25	500QH1500-40-250	500	1405	1460	1200	1500	1700	4-M36X500	900	500	1600	2700	300	1750	825	1550	250
26	500QH1500-50-315	500	1405	1460	1200	1500	1700	4-M36X500	900	500	1700	2700	300	1750	825	1550	250
27	500QH1500-60-355	500	1405	1460	1200	1500	1700	4-M36X500	900	500	1700	2700	300	1750	825	1550	250
28	500QH2000-30-250	500	1405	1460	1200	1500	1700	4-M36X500	900	500	1800	2700	300	1750	825	1550	285

QH-G系列潜水供水泵悬吊井筒式安装尺寸表
Size table for installation through overhung-pit of QH-G series of submersible water supply pumps

序号 Item	型号Type	øA	ØD	ØE	ØF	G	H	n-øf	R	M	N	O	P	Z	T	W	V
29	500QH2000-35-280	500	1405	1460	1200	1500	1700	4-M36x500	900	500	1800	2700	300	1750	825	1550	285
30	500QH2000-40-315	500	1405	1460	1200	1500	1700	4-M36x500	900	500	1800	2700	300	1750	825	1550	285
31	500QH2000-50-400	500	1405	1460	1200	1500	1700	4-M36x500	900	500	1800	2700	300	1750	825	1550	285
32	500QH2000-60-500	500	1405	1460	1200	1500	1700	4-M36x500	900	500	1800	2700	300	1750	825	1550	285
33	600QH2880-20-220	600	1405	1460	1200	1500	1700	4-M36x500	1000	600	1900	2700	300	1750	825	1550	340
34	600QH2880-24-280	600	1405	1460	1200	1500	1700	4-M36x500	1000	600	1900	2700	300	1750	825	1550	340
35	600QH2880-30-355	600	1405	1460	1200	1500	1700	4-M36x500	1000	600	1900	2700	300	1750	825	1550	340
36	600QH2880-35-400	600	1405	1460	1200	1500	1700	4-M36x500	1000	600	1900	2700	300	1750	825	1550	340
37	600QH2880-40-450	600	1520	1600	1300	1650	1850	4-M36x500	1000	600	1900	2700	300	1900	875	1700	340
38	600QH2880-50-560	600	1520	1600	1300	1650	1850	4-M36x500	1000	600	1900	2700	300	1900	875	1700	340
39	600QH2880-60-710	600	1520	1600	1300	1650	1850	4-M36x500	1000	600	1900	2700	300	1900	875	1700	340
40	700QH4000-16-250	700	1520	1600	1300	1650	1850	4-M36x500	1250	700	2000	2800	300	1900	875	1700	405
41	700QH4000-20-315	700	1520	1600	1300	1650	1850	4-M36x500	1250	700	2000	2800	300	1900	875	1700	405
42	700QH4000-24-400	700	1520	1600	1300	1650	1850	4-M36x500	1250	700	2000	2800	300	1900	875	1700	405
43	700QH4000-30-500	700	1520	1600	1300	1650	1850	4-M36x500	1250	700	2000	2800	300	1900	875	1700	405
44	700QH4000-35-560	700	1520	1600	1300	1650	1850	4-M36x500	1250	700	2000	2800	300	1900	875	1700	405
45	700QH4000-40-630	700	1520	1600	1300	1650	1850	4-M36x500	1250	700	2000	2800	300	1900	875	1700	405
46	900QH6000-9-220	900	1520	1600	1300	1650	1850	4-M36x500	1600	850	2400	3000	300	2000	875	1700	500
47	900QH6000-12-280	900	1520	1600	1300	1650	1850	4-M36x500	1600	850	2400	3000	300	2000	875	1700	500
48	900QH6000-16-400	900	1520	1600	1300	1650	1850	4-M36x500	1600	850	2400	3000	300	2000	875	1700	500
49	900QH6000-20-450	900	1520	1600	1300	1650	1850	4-M36x500	1600	850	2400	3000	300	2000	875	1700	500
50	900QH6000-24-560	900	1830	1900	1600	1900	2200	6-M36x500	1600	850	2400	3000	400	2250	1000	2000	500
51	900QH6000-30-710	900	1830	1900	1600	1900	2200	6-M36x500	1600	850	2400	3100	400	2250	1000	2000	500
52	1000QH8000-9-280	1000	1830	1900	1600	1900	2200	6-M36x500	1800	1000	2600	3500	400	2300	1000	2300	575
53	1000QH8000-12-400	1000	1830	1900	1600	1900	2200	6-M36x500	1800	1000	2600	3500	400	2300	1000	2300	575
54	1000QH8000-16-500	1000	1830	1900	1600	1900	2200	6-M36x500	1800	1000	2600	3500	400	2300	1000	2300	575
55	1000QH8000-20-630	1000	1830	1900	1600	1900	2200	6-M36x500	1800	1000	2600	3500	400	2300	1000	2300	575
56	1200QH10000-9-355	1200	1830	1900	1600	1900	2200	6-M36x500	2000	1200	2800	3500	400	2580	1100	2575	645
57	1200QH10000-12-450	1200	1830	1900	1600	1900	2200	6-M36x500	2000	1200	2800	3500	400	2580	1100	2575	645
58	1200QH10000-16-630	1200	2045	2100	1800	2100	2400	6-M36x500	2000	1200	2800	3500	400	2580	1100	2575	645
59	1200QH12000-9-450	1200	1830	1900	1600	1900	2200	6-M36x500	2000	1200	3000	3500	400	2825	1150	2825	705
60	1200QH12000-12-560	1200	2045	2100	1800	2100	2400	6-M36x500	2000	1200	3000	3810	400	2825	1150	2825	705
61	1200QH12000-16-710	1200	2045	2100	1800	2100	2400	6-M36x500	2000	1200	3000	3500	400	2825	1150	2825	705

(3)混凝土预制井筒式安装及尺寸 Installation throught prefabricated concrete-pit and size

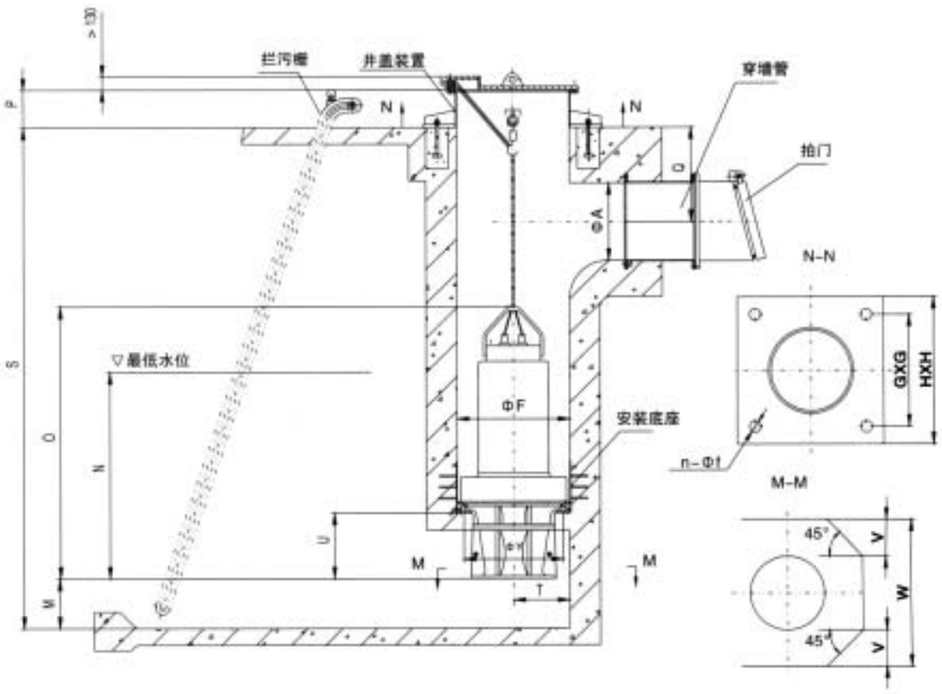

混凝土预制井筒式安装图
Sketch for Installation throught prefabricated concrete-pit

注:
①表中尺寸为泵的安装尺寸及泵站设计的水力控制尺寸，其中泵站设计的水力尺寸为参考值。
②尺寸A依据泵流量确定，以控制流速，减少水力损失，表中尺寸为参考值，如需要，可适量加大；尺寸S、Q依据泵站具体条件确定；尺寸R为最小参考尺寸，如条件许可，可适当加大;
③泵中心距后池壁不大于尺寸T;
④同池内两泵中心距不小于尺寸Z
Note
①The sizes as shown in the table are installation sizes and hydraulic control sizes designed for a pump station, of which the latter are values used for reference.
②Size A is determined based on pump flow to control flow rate and reduce hydraulic loss. The sizes given in the table are for reference and can be increased as appropriate. Sizes S and Q are determined based on pump station-specific conditions.
③The distance from pump center to rear sump wall should not be greater than size T;
④The distance between two pump centers in the same sump should not be less than size Z.

QH–G系列潜水供水泵混凝土预制井筒式安装尺寸表

Size table for installation through prefabricated concrete-pit of QH-G series of submersible water supply pumps

序号 Item	型号Type	øA	ØF	G	H	n-øf	M	N	O	P	Z	T	W	V	U	øY
1	350QH1100-10-45	350	600	1150	1350	4-M24X400	400	1400	1850	200	1400	450	850	210	360	500
2	400QH1400-11-55	400	600	1150	1350	4-M24X400	400	1400	1850	200	1400	450	850	210	360	500
3	350QH1000-15-75	350	800	1350	1600	4-M24X400	400	1400	2000	200	1650	575	1100	210	420	650
4	400QH1500-10-75	400	800	1350	1600	4-M24X400	450	1600	2000	200	1650	575	1100	250	420	650
5	400QH1500-15-90	400	800	1350	1600	4-M24X400	450	1600	2000	200	1650	575	1100	250	420	650
6	450QH2200-10-90	450	800	1350	1600	4-M24X400	500	1700	2000	200	1650	575	1200	300	420	650
7	350QH1000-28-110	350	1000	1700	2000	4-M36X500	400	1400	2200	220	2050	725	1450	210	420	650
8	400QH1200-20-110	400	800	1350	1600	4-M30X400	450	1500	2200	200	1650	575	1100	230	420	650
9	500QH2000-15-132	500	1000	1700	2000	4-M36X500	500	1700	2200	220	2050	725	1450	285	650	850
10	700QH2500-11-132	700	1000	1700	2000	4-M36X500	500	1700	2200	220	2050	725	1450	320	650	850
11	600QH3000-10-132	600	1000	1700	2000	4-M36X500	600	1900	2200	220	2050	725	1450	350	650	850
12	350QH1000-36-160	350	1000	1700	2000	4-M36X500	400	1400	2400	220	2050	725	1450	210	650	850
13	400QH1800-20-160	400	1000	1700	2000	4-M36X500	500	1700	2400	220	2050	725	1450	275	650	850
14	600QH3300-12-160	600	1000	1700	2000	4-M36X500	600	1900	2400	220	2050	725	1450	370	650	850
15	350QH1100-40-185	350	1000	1700	2000	4-M36X500	400	1700	2400	220	2050	725	1450	210	650	850
16	400QH1500-30-185	400	1000	1700	2000	4-M36X500	450	1600	2400	220	2050	725	1450	250	650	850
17	600QH3000-16-185	600	1000	1700	2000	4-M36X500	600	1900	2400	220	2050	725	1450	350	650	850
18	500QH2400-22-200	500	1000	1700	2000	4-M36X500	500	1700	2400	220	2050	725	1450	320	650	850
19	700QH5000-12-250	700	1100	1700	2000	4-M36X500	700	2100	2600	220	2050	775	1820	455	700	950
20	400QH1800-24-185	400	1000	1700	2000	4-M36X500	500	1700	2800	220	2050	725	1450	275	650	850
21	700QH4000-20-315	700	1100	1700	2000	4-M36X500	700	2000	3200	220	2050	775	1450	405	700	950
22	400QH1080-50-220	400	1100	1400	1600	4-M36X500	400	1400	2400	300	1650	775	1450	210	600	800
23	400QH1080-60-280	400	1100	1400	1600	4-M36X500	400	1400	2400	300	1650	775	1450	210	600	800
24	500QH1500-35-220	500	1200	1500	1700	4-M36X500	500	1600	2700	300	1750	825	1550	250	800	900
25	500QH1500-40-250	500	1200	1500	1700	4-M36X500	500	1600	2700	300	1750	825	1550	250	800	900
26	500QH1500-50-315	500	1200	1500	1700	4-M36X500	500	1700	2700	300	1750	825	1550	250	800	900
27	500QH1500-60-355	500	1200	1500	1700	4-M36X500	500	1700	2700	300	1750	825	1550	250	800	900
28	500QH2000-30-250	500	1200	1500	1700	4-M36X500	500	1800	2700	300	1750	825	1550	285	800	

QH–G系列潜水供水泵混凝土预制井筒式安装尺寸表

Size table for installation through prefabricated concrete-pit of QH-G series of submersible water supply pumps

序号 Item	型号Type	øA	ØF	G	H	n-øf	M	N	O	P	Z	T	W	V	U	øY
29	500QH2000-35-280	500	1200	1500	1700	4-M36x500	500	1800	2700	300	1750	825	1550	285	800	900
30	500QH2000-40-315	500	1200	1500	1700	4-M36x500	500	1800	2700	300	1750	825	1550	285	800	900
31	500QH2000-50-400	500	1200	1500	1700	4-M36x500	500	1800	2700	300	1750	825	1550	285	800	900
32	500QH2000-60-500	500	1200	1500	1700	4-M36x500	500	1800	2700	300	1750	825	1550	285	800	900
33	600QH2880-20-220	600	1200	1500	1700	4-M36x500	600	1900	2700	300	1750	825	1550	340	800	900
34	600QH2880-24-280	600	1200	1500	1700	4-M36x500	600	1900	2700	300	1750	825	1550	340	800	900
35	600QH2880-30-355	600	1200	1500	1700	4-M36x500	600	1900	2700	300	1750	825	1550	340	800	900
36	600QH2880-35-400	600	1200	1500	1700	4-M36x500	600	1900	2700	300	1750	825	1550	340	800	900
37	600QH2880-40-450	600	1300	1650	1850	4-M36x500	600	1900	2700	300	1900	875	1700	340	800	1000
38	600QH2880-50-560	600	1300	1650	1850	4-M36x500	600	1900	2700	300	1900	875	1700	340	800	1000
39	600QH2880-60-710	600	1300	1650	1850	4-M36x500	600	1900	2700	300	1900	875	1700	340	800	1000
40	700QH4000-16-250	700	1300	1650	1850	4-M36x500	700	2000	2800	300	1900	875	1700	405	800	1000
41	700QH4000-20-315	700	1300	1650	1850	4-M36x500	700	2000	2800	300	1900	875	1700	405	800	1000
42	700QH4000-24-400	700	1300	1650	1850	4-M36x500	700	2000	2800	300	1900	875	1700	405	800	1000
43	700QH4000-30-500	700	1300	1650	1850	4-M36x500	700	2000	2800	300	1900	875	1700	405	800	1000
44	700QH4000-35-560	700	1300	1650	1850	4-M36x500	700	2000	2800	300	1900	875	1700	405	800	1000
45	700QH4000-40-630	700	1300	1650	1850	4-M36x500	700	2000	2800	300	1900	875	1700	405	800	1000
46	900QH6000-9-220	900	1300	1650	1850	4-M36x500	850	2400	3000	300	2000	875	1700	500	800	1000
47	900QH6000-12-280	900	1300	1650	1850	4-M36x500	850	2400	3000	300	2000	875	1700	500	800	1000
48	900QH6000-16-400	900	1300	1650	1850	4-M36x500	850	2400	3000	300	2000	875	1700	500	800	1000
49	900QH6000-20-450	900	1300	1650	1850	4-M36x500	850	2400	3000	300	2000	875	1700	500	800	1000
50	900QH6000-24-560	900	1600	1900	2200	6-M36x500	850	2400	3000	400	2250	1000	2000	500	800	1200
51	900QH6000-30-710	900	1600	1900	2200	6-M36x500	850	2400	3100	400	2250	1000	2000	500	800	1200
52	1000QH8000-9-280	1000	1600	1900	2200	6-M36x500	1000	2600	3500	400	2300	1000	2300	575	900	1200
53	1000QH8000-12-400	1000	1600	1900	2200	6-M36x500	1000	2600	3500	400	2300	1000	2300	575	900	1200
54	1000QH8000-16-500	1000	1600	1900	2200	6-M36x500	1000	2600	3500	400	2300	1000	2300	575	900	1200
55	1000QH8000-20-630	1000	1600	1900	2200	6-M36x500	1000	2600	3500	400	2300	1000	2300	575	900	1200
56	1200QH10000-9-355	1200	1600	1900	2200	6-M36x500	1200	2800	3500	400	2580	1100	2575	645	900	1200
57	1200QH10000-12-450	1200	1600	1900	2200	6-M36x500	1200	2800	3500	400	2580	1100	2575	645	900	1200
58	1200QH10000-16-630	1200	1800	2100	2400	6-M36x500	1200	2800	3500	400	2580	1100	2575	645	900	1200
59	1200QH12000-9-450	1200	1600	1900	2200	6-M36x500	1200	3000	3500	400	2825	1150	2825	705	900	1200
60	1200QH12000-12-560	1200	1800	2100	2400	6-M36x500	1200	3000	3810	400	2825	1150	2825	705	900	1400
61	1200QH12000-16-710	1200	1800	2100	2400	6-M36x500	1200	3000	3500	400	2825	1150	2825	705	900	1400

2、QW-G系列潜水供水泵的安装及尺寸 QW-G submersible pump installation and size

QW-G型泵的安装方式主要是导轨式自动耦合安装及导杆式自动耦合安装，其次还可以根据用产情况，选择固定式干式安装、斜拉式安装及浮坞式安装。

(1)QW-G 型泵的导轨式自动耦合安装。在自动耦合式安装中，泵与耦合接口相连，耦合底座固定于泵坑底部(在建造泵坑时，先预埋好地脚螺栓，使用时将耦合底座固定即可)，泵可以在导轨中上下自由移动，当泵放下时，耦合接口自动地与耦合底座耦合，而提升时泵与耦合底座自动脱落。

这种方式可根据用户要求配备液位控制开关、中间端子箱及全自动保护控制柜。

QW-G submersible pumps are primarily installed by means of automatic coupling through guide rail and automatic coupling through guide rod. In addition, users can choose fixed dry installation, canting pull installation or floating dock installation, depending on their specific situation.

(1)Automatic coupling installation through guide rail. For automatic coupling installation, a pump is connected to the coupling device, whose base frame is fixed to the bottom of a pump sump (please pre-embed some anchor bolts when building the pump sump, and fix the coupling base frame when using it). The pump can be moved up and down along the guide rail. When the pump is let down, the coupling device will couple with the base frame automatically, and, when the pump is lifted, the base frame will come off automatically.

For this installation, it can be configured with a liquid level control switch, an intermediate terminal box and a full automatic protection control cabinet according to user's -specific requirements.

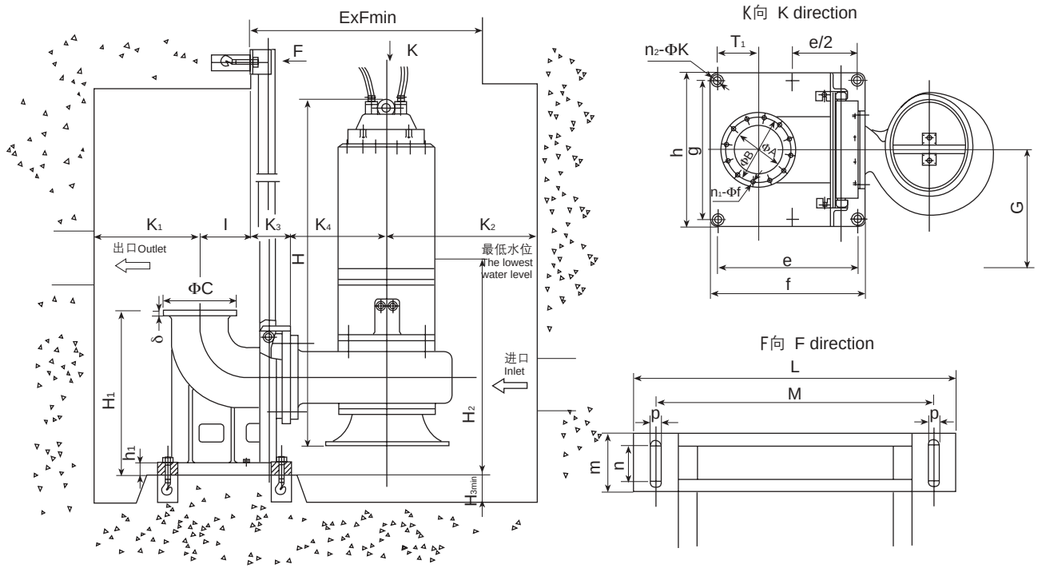

注:

①、G尺寸为：同池中两泵间的最小中心距；

②、K1尺寸为出口弯管中心距池壁最小距离；K2尺寸为泵中心距进口池壁最小距离；

③、在选型时，应注明泵的型号、安装方式、池深、泵控制保护方式，以便提供最优的系统；

④、如用产有特别需要，我厂可提供特种材料的水泵。

Note:

①G represents the minimal distance between the centers of two pumps in the pit;

②K1 represents the minimal distance between the center of the outlet bent and the pit wall;K2 represents the minimal distance between the pump center and the pit wall at the inlet.

③When choosing a pump,you should make your decision depending on chits type.mounting method, pit depth,and pump control & protection,in order to purchase a most appropriate system.

④If special requirements should be met,we aslo can customize a water pump for our customers with special materials.

QW-G系列潜水供水泵导轨式自动耦合安装尺寸表

Automatic coupling installation through guide rail and size of QW-G series of submersible water supply pumps

序号 Item	型号Type	øA	øB	øC	n₁-øf	δ	e	f	g	h	H₁	h₁	n₂-øk	L	M	m	n	p	K₃	K₄	H	I	T₁	Hsmin	H₂	ExF	K₁	K₂	G
1	80QW50-60-22	80	150	190	4-17.5	25	350	420	360	400	480	25	4-24	472	407	100	60	18	107	230	1271	108	92	200	850	900x800	400	600	530
2	100QW70-22-11																			340	720				570	900x750		600	560
3	100QW50-35-11																			378	937	128	105	300	780	900x750	450	450	560
4	100QW87-28-15																			300	960				800	900x750		640	560
5	100QW100-60-30																			250	1286				500	900x750		600	560
6	150QW100-15-11	150	225	265	8-17.5	25	350	420	360	425	480	25	4-24	505	440	100	60	18	102	260	980	128	125	250	730	900x750	600	650	560
7	150QW200-10-11																			280	1004				830	900x800		500	690
8	150QW140-18-15																			350	980				720	900x800		600	690
9	150QW70-40-18.5																			378	1196				900	1000x800		550	690
10	150QW130-30-22																			370	1418				550	1150x850		550	690
11	150QW100-40-30																			385	1402				550	1150x850		650	720
12	150QW200-22-30	150	225	265	8-17.5	25	480	560	520	600	525	35	4-33	640	560	100	60	22	137	460	1366	213	152	300	550	1150x850	600	600	720
13	150QW200-30-30																			470	1422				550	1150x850		650	720
14	150QW160-40-37																			530	1875				550	1200x900		650	720
15	150QW150-60-55																			540	1898				550	1300x1000		650	750
16	200QW360-6-11																			263	1037				700	900x750		550	750
17	200QW400-7-15																			350	1104				750	900x800		600	750
18	200QW250-15-18.5	200	280	320	8-17.5	25	560	640	550	640	615	30	4-33	700	605	100	60	22	138	450	1285	274	180	850	850	1150x850	750	650	750
19	200QW300-10-22																			400	1516				850	1150x900		650	750
20	200QW400-10-22																			460	1570				900	1150x850		700	750
21	200QW300-22-37																			510	1930					1300x900		750	750
22	200QW450-22-45																			510	1930					1300x900	700	750	750
23	200QW250-40-55																			560	1285					1150x850		750	800
24	200QW250-50-55																			450	1616	274	180	300	600	1150x900	600	850	800
25	200QW400-34-55																			600	1092					1300x900		780	800
26	200QW250-60-75																			450	2141					1400x1050		800	900
27	200QW350-50-75																			640	2156					1400x1050		900	900
28	200QW350-60-90																			450	2235					1450x1200		900	1000
29	250QW600-7-22																			460	1576			900		1200x900		600	850
30	250QW250-17-22																			500	1556					1150x900		600	850
31	250QW500-10-30	250	335	375	12-17.5	27	650	750	700	800	720	42	4-40	798	710	150	90	27	177	560	1453	303	185	300		1300x1000	800	700	850
32	250QW400-15-30																			560	1455				720	1300x1000		700	850
33	250QW600-15-45																			550	2007					1450x1200		750	850
34	250QW650-22-75	250	335	375	12-17.5	27	650	750	700	800	720	42	4-40	798	710	150	90	27	177	620	2161	303	185	300	720	1450x1200	800	750	900
35	250QW650-30-90																			560	2305					1600x1300		900	950

QW-G系列潜水供水泵导轨式自动耦合安装尺寸表

Automatic coupling installation through guide rail and size of QW-G series of submersible water supply pumps

序号 Item	型号Type	øA	øB	øC	n1-øf	δ	e	f	g	h	h1	n2-øk	L	M	m	n	p	K3	K4	H	I	T1	H3min	H2	ExF	K1	K2	G
36	250QW600-40-110	250	335	375	12-17.5	27	650	750	700	800	42	4-40	798	710	150	90	27	177	800	2548	303	185	300	720	1750x1350	800	800	1000
37	250QW600-50-132																			2548					1750x1350		800	1100
38	300QW720-10-37																		525	1935					1300x1000		650	940
39	300QW900-8-37																		560	1935					1300x1000		650	940
40	300QW800-15-55	300	395	440	12-22	30	770	870	780	880	45	4-40	888	800	150	90	27	177	555	1955	383	250	400	760	1450x1200	900	750	940
41	300QW500-60-132																		600	2899			500	800	1800x1400		1000	940
42	300QW700-60-185																		600	2699					1800x1400		1050	940
43	350QW1440-5.5-37																		600	2060					1300x1000		750	930
44	350QW1100-10-45																		550	1990					1450x1200		800	930
45	350QW1200-18-90																		620	2395					1600x1300		800	930
46	350QW1000-28-132	350	445	490	12-22	30	770	870	780	880	45	4-40	888	800	150	90	27	177	700	2528	383	250	500	780	1800x1400	1000	950	930
47	350QW1000-30-160																		700	2658					1900x1500		1050	950
48	350QW1200-40-200																		900	2271					1900x1500		950	950
49	350QW1000-60-250																		800	2089					1900x1500		1050	1000
50	400QW1250-5-30																		700	1496					1400x1200		750	900
51	400QW1692-7-55																		700	2546					1600x1300		750	900
52	400QW2016-7-55																		700	2600					1600x1300		800	950
53	400QW1500-10-75																		640	2432					1600x1300		800	950
54	400QW1700-12-110																		750	2660					1750x1350		950	1050
55	400QW1700-22-160	400	515	565	16-26	30	850	950	780	880	50	6-40	630	542	150	90	27	275	900	2920	390	240	500	800	2100x1700	1100	850	1050
56	400QW1500-26-160																		900	2897					1900x1500		900	1050
57	400QW1700-30-200																		900	3078					2100x1700		950	1100
58	400QW1600-34-250																		900	3078					2100x1700		1050	1200
59	400QW1800-40-280																		700	3045					1900x1500		1100	1250
60	400QW1300-50-280																		800	2938					1900x1500		1100	1250
61	500QW2200-10-110																		750	2404					1600x1450		1050	1000
62	500QW2600-15-160																		750	2790					2200x1800		1200	1000
63	500QW2400-22-220	500	620	670	20-26	32	1140	1260	830	950	50	6-48	798	710	150	90	27	280	1000	3078	595	300	600	1250	2200x1800	1300	1200	1000
64	500QW2400-30-300																		950	3680					2800x2400		1800	1300
65	500QW2400-40-400																		1200	4020					3200x2800		2000	1500
66	550QW3500-7-110																		900	2948					1900x1500		1100	1200
67	550QW3960-15-220	550	675	730	20-30	32	1180	1300	1090	1210	55	6-48	798	710	150	90	27	288	1000	3283	665	290	600	1300	2000x1700	1300	1250	1250
68	550QW4000-22-400																		1300	4080					3200x2800		2000	1500
69	550QW4000-30-450																		1450	4460					3500x3200		2200	1700
70	600QW3800-10-160																		850	2388					2000x1700		1200	1200
71	600QW5800-10-250	600	725	780	20-30	32	1180	1300	1090	1210	55	6-48	888	800	150	90	27	290	1200	3480	635	320	600	1350	2500x2000	1300	1250	1800
72	600QW6000-15-355																		1500	3980					2800x2600		1800	1400

(2)导杆式自动耦合安装及尺寸 Rod-guided coupling installation and its size

这种安装形式适用于400口径以下的潜水泵。在这种安装形式中，泵与耦合接口相连，耦合底座固定子泵坑底部(在建造泵坑时，先预埋好地脚螺栓，使用时将耦合底座固定即可)，泵可以在导杆上上下自由移动，当泵放下时，耦合接口自动于耦合底座耦合，而提升时泵与耦合底座自动脱落。

这种方式可根据用产要求配备液位控制开关、中间端子箱及全自动保护控制柜。

This installation is suitable for outlet diameter ⩽ 400mm submersible pump. In this installation.the pump is connected to a coupler,the seat of which is fastened in the pump pit(when constructing the pit,prepare a anchor bolt in the pit,then just connect the coupler's seat to the bolt during installation).The pump can move up and down freely along a guide rail.When the pump moves down,the coupler will engage with its seat automatically. When the pump moves up.the coupler will detach from its seat voluntarily.

This installation can be fitted,upon customers'requirement,with a level limit switch,a terminal box and a self-protective control cabinet.

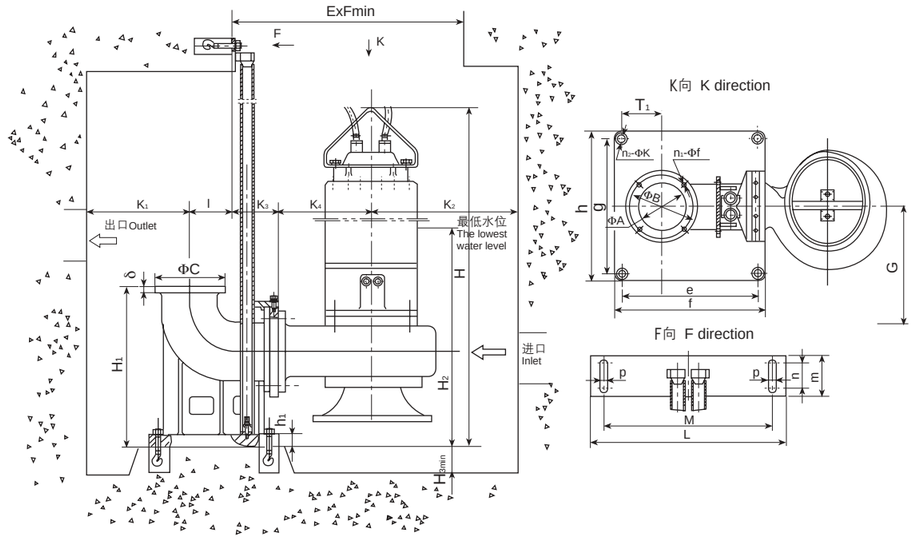

注:

①、G尺寸为：同池中两泵间的最小中心距;

②、K_1尺寸为出口弯管中心距池壁最小距离；K_2尺寸为泵中心距进口池壁最小距离;

③、在选型时，应注明泵的型号、安装方式、池深、泵控制保护方式，以便提供最优的系统;

④、如用产有特别需要，我厂可提供特种材料的水泵。

Note:

①G represents the minimal distance between the centers of two pumps in the pit;

②K_1 represents the minimal distance between the center of the outlet bent and the pit wall;K_2 represents the minimal distance between the pump center and the pit wall at the inlet.

③When choosing a pump,you should make your decision depending on chits type, mounting method.pit depth,and pump control & protection,in order to purchase a most appropriate system.

④If special requirements should be met,we aslo can customize a water pump for our customers with special materials.

QW-G系列潜水供水泵导杆式自动耦合安装尺寸表

Automatic coupling installation through guide rod of QW-G series of submersible water supply pumps

序号 Item	型号Type	øA	øB	øC	n1-øf	δ	e	f	g	h	H1	h1	n2-øk	L	M	m	n	p	K3	K4	H	l	T1	H3min	H2	ExF	K1	K2	G
1	80QW50-60-22	80	150	190	4-17.5	18	220	260	220	250	350	20	4-14	290	250	35	15	12	132	230	1271	82	50	200	850	900x800	400	600	530
2	100QW70-22-11	100	170	210	4-17.5	20	250	290	240	270	400	20	4-14	310	270	35	15	12	132	340	720	90	50	300	570	900x750	450	600	560
3	100QW50-35-11																			378	937				780	900x750		450	560
4	100QW87-28-15																			300	960				800	900x750		640	560
5	100QW100-60-30																			250	1286				500	900x750		600	560
6	150QW100-15-11	150	225	265	8-17.5	20	270	320	290	320	420	22	4-20	350	310	35	15	12	142	260	980	116	60	250	730	900x750	600	650	560
7	150QW200-10-11																			280	1004				830	900x800		500	690
8	150QW140-18-15																			350	980				720	900x800		600	690
9	150QW70-40-18.5																			378	1196				900	1000x800		550	690
10	150QW130-30-22																			370	1418				550	1150x850		550	690
11	150QW100-40-30																			385	1402				550	1150x850		650	720
12	150QW200-22-30																			460	1366			300	550	1150x850	600	600	720
13	150QW200-30-30																			470	1422				550	1150x850		650	720
14	150QW160-40-37																			530	1875				550	1200x900		650	720
15	150QW150-60-55																			540	1898				550	1300x1000		650	750
16	200QW360-6-11	200	280	320	8-17.5	24	440	500	350	410	605	28	4-27	320	250	150	90	18	192	263	1037	188	103	300	700	900x750	700	550	750
17	200QW400-7-15																			350	1104				750	900x800		600	750
18	200QW250-15-18.5																			450	1285				850	1150x850		750	750
19	200QW300-10-22																			400	1516				850	1150x900		650	750
20	200QW400-10-22																			460	1570				900	1150x850		700	750
21	200QW300-22-37																			510	1930					1300x900		750	750
22	200QW450-22-45																			510	1930					1300x900		750	750
23	200QW250-40-55																			560	1285					1150x850		750	800
24	200QW250-50-55																			450	1616					1150x900		850	800
25	200QW400-34-55																			600	1092				600	1300x900		780	800
26	200QW250-60-75																			450	2141					1400x1050		800	900
27	200QW350-50-75																			640	2156					1400x1050		900	900
28	200QW350-60-90																			450	2235					1450x1200		900	1000
29	250QW600-7-22	250	335	375	12-17.5	25	450	510	400	460	620	30	4-27	320	250	150	90	18	197	460	1576	248	100	300	900	1200x900	800	600	850
30	250QW250-17-22																			500	1556					1150x900		600	850
31	250QW500-10-30																			560	1453					1300x1000		700	850
32	250QW400-15-30																			560	1455				720	1300x1000		700	850
33	250QW600-15-45																			550	2007					1450x1200		750	850

QW-G系列潜水供水泵导杆式自动耦合安装尺寸表

Automatic coupling installation through guide rod of QW-G series of submersible water supply pumps

序号 Item	型号Type	øA	øB	øC	n1-øf	δ	e	f	g	h	H1	h1	n2-øk	L	M	m	n	p	K3	K4	H	l	T1	H3min	H2	ExF	K1	K2	G
34	250QW650-22-75	250	335	375	12-17.5	25	450	510	400	460	620	30	4-27	320	250	150	90	18	197	620	2161	248	100	300	720	1450x1200	800	750	900
35	250QW650-30-90																			560	2305					1600x1300		900	950
36	250QW600-40-110																			800	2548					1750x1350		800	1000
37	250QW600-50-132																			800	2548					1750x1350		800	1100
38	300QW720-10-37	300	395	440	12-22	28	520	580	500	560	715	30	4-27	320	250	150	90	18	202	525	1935	253	155	400	760	1300x1000	900	650	940
39	300QW900-8-37																			560	1935					1300x1000		650	940
40	300QW800-15-55																			555	1955					1450x1200		750	940
41	300QW500-60-132																			600	2899					1800x1400		1000	940
42	300QW700-60-185																			600	2899					1800x1400		1050	940
43	350QW1440-5.5-37	350	445	490	12-22	28	560	620	530	590	715	30	4-27	320	250	150	90	18	202	600	2060	283	175	500	780	1300x1000	1000	750	930
44	350QW1100-10-45																			550	1990					1450x1200		800	930
45	350QW1200-18-90																			620	2395					1600x1300		800	930
46	350QW1000-28-132																			700	2528					1800x1400		950	930
47	350QW1000-30-160																			700	2658					1900x1500		1050	950
48	350QW1200-40-200																			900	2271					1900x1500		950	950
49	350QW1000-60-250																			800	2089					1900x1500		1050	1000
50	400QW1250-5-30	400	515	565	16-26	30	700	760	600	660	780	30	4-27	630	542	150	90	22	227	700	1496	363	175	500	800	1400x1200	1100	750	900
51	400QW1692-7-55																			700	2546					1600x1300		750	900
52	400QW2016-7-55																			700	2600					1600x1300		800	950
53	400QW1500-10-75																			640	2432					1600x1300		800	950
54	400QW1700-12-110																			750	2660					1750x1350		950	1050
55	400QW1700-22-160																			900	2920					2100x1700		850	1050
56	400QW1500-26-160																			900	2897					1900x1500		900	1050
57	400QW1700-30-200																			900	3078					2100x1700		950	1100
58	400QW1600-34-250																			900	3078					2100x1700		1050	1200
59	400QW1800-40-280																			700	3045					1900x1500		1100	1250
60	400QW1300-50-280																			800	2938					1900x1500		1100	1250

(3)固定式干式安装
Fixed installation

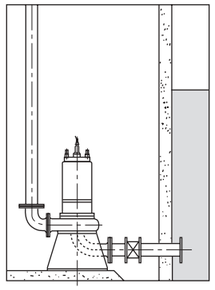

安装在泵房内固定的基础上，采用电机定子冷却系统来冷却电机，整个水泵外表都不与介质接触。连接好进水管与出水管即可运行，安装方法类似常规于式水泵。对需防止水淹的场合有实际意义。

这种安装方式，推荐使用WL系列立式排污泵。

By this method, the pumps are installed onto the fixed foundation within a pump room, motors are cooled through motor stator cooling system, and the whole exterior of pumps does not make contact with media. To operate a pump, please connect the inlet pipe and the outlet pipe, The installation is similar to that for regular dry pumps, and practical to those situations requiring prevention from water flooding.

(4)斜拉式安装
Canting pull installation

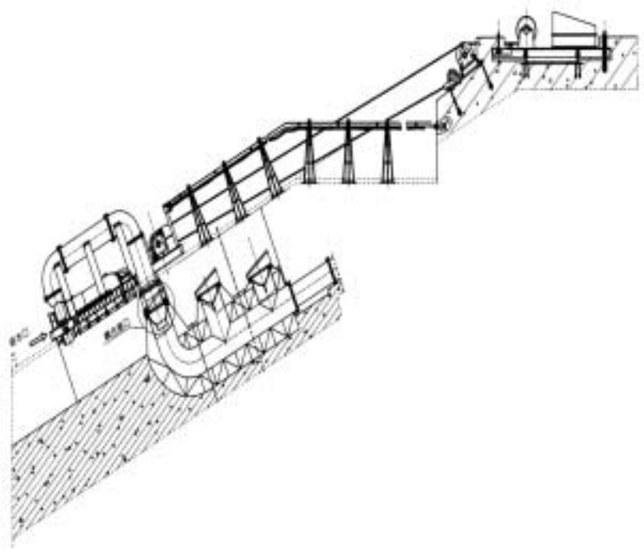

斜拉自耦式泵站安装形式，主要适用于水位涨落变幅较大、同时要求水泵频繁地上、下移动取水的场合，还可适用于水库等取水点坡度较小的场所。具有下述显著优点:

①无泵房建设要求;

②安装方便、快速耦合，接口密封可靠;

③可实现多接口耦合，适应不同水位时的取水要求。

该安装型式，主要由潜水泵、小车部件、自动耦合接口、卷扬动力系统等几部分组成，采用专门的防振设计，保证了泵车在轨道上运行时的平稳性。

Canting pull automatic coupling installation is primarily applied in situations where there is a wide fluctuation of water level and meanwhile a frequent up and down movement of pumps for water intake, and also at locations, such as reservoirs, where the slope of a water intake point is relatively small. This installation has the outstanding features as follows:

①No need for pump rooms;

②Easy installation, quick coupling, and reliable seal at joints.

③Adaptability to water intake at different water levels thanks to multi-joint coupling.

This mode of installation mainly consists of submersible pumps, truck parts, automatic coupling joints, hoisting power system, etc. and adopts dedicated anti-vibration design, which guarantees the stability for a pump truck operating on the rail.

(5)浮坞式安装
Floating dock installation

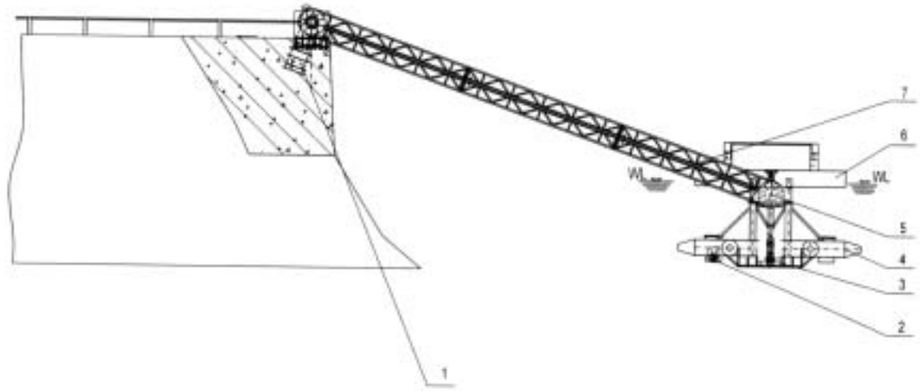

1、基础预埋件	Pre-embedded parts in foundation
2、平衡系统小型排水泵	Small drainage pump for balance system
3、潜水电泵	Submersible electric pump
4、浮坞筒体部件	Floating dock tank parts
5、密封铰支链	Branched chain for seal
6、辅助浮筒部件	Auxiliary floating dock tank parts
7、摇臂部件	Rocker parts

浮坞式潜水泵站是将潜水泵与浮坞技术有机结合而成的新型给水泵站，将潜水泵安置在浮坞上，利用摇臂部件连接岸上的出水管。主要适用于水位涨落变幅较大的河流中取水，也可适用于水库等取水点坡度较小的场所。

具有下述显著优点:

1、无泵房建设要求，安装方便、快捷:

2、适应水位高低变化，保证取水口位置与水面保持恒定;

3、装置在水下运行，平稳、安全、可靠。

注:

固定式干式安装、斜拉式安装、浮坞式安装等安装形式，在订货时应明确具体安装方式，具体安装尺寸及供货范围由供需双方共同确定。

Floating dock submersible pump station is new-type feed pump station organically integrating submersible pump and floating dock technologies, fixing submersible pumps onto the floating dock and connecting the outlet pipe via rocker parts. It is applicable primarily to water intake from a river with wide fluctuation of water level and also locations, such as reservoirs, where the slope of a water intake point is relatively small.

It has the outstanding features as follows:

1, No need for pump rooms, easy installation, quick coupling;

2, Adaptability to water level changes, thus guaranteeing water inlet to be constantly at the same plane as water surface;

3, Stability, safety and reliability because of submerged operation.

Note:

When placing an order, please indicate clearly the specific method of installation, whether fixed dry installation, canting pull installation or floating dock installation. The exact installation size and scope of supply will be jointly determined by the supplier and user.

	供应范围 Scope of supply	安装方式 Mounting method				备注 Remarks
		QH系列井筒式 QH series			QW系列 QW series	
		钢制 Steel made	混凝土预制 Concrete prefabrication	悬吊式 Suspension type	耦合式 Coupling	
必购件 Required paris	主泵 Main pump	●	●	●	●	
	控制柜 Control cabinet	●	●	●	●	
	井筒（含三通） Column pipe (including three-way pipe)	●		●		
	电缆固定装置 Cable fixture	●	●	●		长度根据用户要求确定 The length to be decided according to users'requirement
	盖板 Cover		●			
	支承座 Fulcrum bearing		●			
	耦合装置 Coupling device				●	导轨长度（或池深）由用户确定 The tail length (or pit depth)to be decided by the user
选购件 Optional paris	拦污栅 Screening grate	●	●	●	●	外形尺寸及安装尺寸由用户确定 The dimension and mouting size to be decided by the user
	拍门 Flap valve	●	●	●	●	
	可挠性橡胶接管 Bendable rubber joint	●	●	●	●	
	地脚螺栓（一套） Anchor bolt(1 set)	●	●	●	●	
	启闭机及闸门 Headstock gear and gate	●	●	●	●	闸门尺寸由用户确定 Gate size to be decided by the user
	端子箱 Terminal box	●	●	●	●	
	液位开关 Levlel limit switch	●	●	●	●	
	穿墙管 Wall bushing pipe	●	●	●		
	蝶(闸)阀 Batterfly (gate)valve	●	●	●	●	
	止回阀 Check valve	●	●	●	●	
易损件 Consumable paris	0形圈 O-shaped ring	●	●	●	●	
	叶轮 Impeller	●	●	●	●	
	密封环 Seal ring	●	●	●	●	
	轴承 Bearing	●	●	●	●	
	机械密封 Mechanical Seal	●	●	●	●	
	进线密封圈 Gasket incoming cables	●	●	●	●	
	电缆线 Cable	●	●	●	●	

八、订货须知 Ordering Instructions

1、在合同中应注明准确的产品型号、产品名称、安装形式、性能参数(流量、扬程、电机功率)和使用电压;
2、控制柜应注明其启动方式(直接启动、自耦降压启动、可控硅软启动)、液位控制方式(浮球、压力变送器数显液位)、安装型式(户内型、户外型):
3、如需配端子箱，应注明是控制型，还是接线型;
4、在“供货范围”中需由用户确定的尺寸应及时提供，同时用户提供安装施工图;
5、本公司潜水电缆正常供货长度为10m，导轨3m，若用产有特殊要求，请予注明;
6、如有其它特殊要求，签订合同前请与亚太销售部门联系;
7、如采用变频控制，请在合同中注明。

1. In a purchase contract, please indicate clearly such information as accurate product model, name, method of installation, performance parameter (flow, head, motor power), and working voltage;
2. For control cabinets, please indicate clearly such information as mode of start (line start, auto-coupling reduced voltage start, soft start of controllable silicon), method of liquid level control (ball float, pressure transmitter for digital indication of liquid level) and mode of installation (indoors, outdoors);
3. If terminal boxes are required, please indicate clearly whether they are control-based or wiring-based;
4. Users should provide sizes in time for those to be determined by themselves in the scope of Supply and mean while installation sketches;
5. Normally, the length of submersible cable supplied is 10m and that of a guide rail is 3m. For special requirements, if any,please indicate them clearly;
6. For other special requirements, please contact the Asia-Pacific Sales Department before concluding a purchase contract.
7. If adopting variable frequency control, please indicate it clearly in a purchase contract.